LINE DATA:

LINE	DISTANCE	BEARING
L1	42.88'	N 34°54'35" E
L2	41.83'	N 05°45'22" E
L3	267.89'	N 14°08'46" W
L4	90.76'	N 09°33'27" E
L5	25.37'	N 27°53'59" E
L6	46.37'	N 20°50'51" E
L7	11.86'	N 22°23'14" E
L8	52.96'	N 30°59'35" E
L9	47.12'	N 05°06'12" E
L10	70.39'	N 16°20'08" W
L11	33.69'	N 17°49'21" W
L12	22.88'	N 06°39'55" W
L13	45.54'	N 13°09'56" W
L14	42.21'	N 15°07'36" W
L15	41.32'	N 13°51'48" W
L16	77.26'	N 10°07'52" E
L17	78.14'	N 01°35'45" W
L18	33.52'	N 34°27'07" E

CURVE DATA:

CURVE	RADIUS	DELTA	ARC	TANGENT	BEARING	CHORD
C1	314.24	31°19'48"	171.83	88.12	S 29°26'22" W	169.70
C2	25.00	90°00'00"	39.27	25.00	S 58°46'28" W	35.36
C3	25.00	90°00'00"	39.27	25.00	N 31°13'32" W	35.36
C4	50.00	181°13'06"	158.14	4702.88	S 33°54'22" W	99.99
C5	25.00	70°37'53"	30.82	17.71	S 21°32'28" E	28.90
C6	75.00	90°00'00"	117.81	75.00	S 31°13'32" E	106.07
C7	25.00	90°00'00"	39.27	25.00	S 31°13'32" E	35.36
C8	536.50	12°01'34"	112.61	56.51	S 07°45'41" W	112.40
C9	25.00	90°00'00"	39.27	25.00	S 46°44'54" W	35.36
C10	75.00	90°00'00"	117.81	75.00	S 46°44'54" W	106.07
C11	75.00	60°25'14"	79.09	43.67	S 28°27'43" E	75.48
C12	25.00	54°37'04"	23.83	12.91	S 31°21'48" E	22.94
C13	50.00	225°50'53"	197.09	118.23	N 63°01'17" E	92.10
C14	25.00	51°39'04"	22.54	12.10	N 24°04'38" W	21.78
C15	486.50	12°01'34"	102.11	51.25	N 07°45'41" E	101.93
C16	264.24	31°19'46"	144.49	74.10	N 29°26'21" E	142.69
C17	25.00	90°00'00"	39.27	25.00	S 43°15'06" E	35.36
C18	38.50	119°34'46"	80.35	66.12	S 61°32'17" W	66.54
C19	25.00	60°25'14"	26.36	14.56	N 28°27'43" W	25.16
C20	25.00	90°00'00"	39.27	25.00	N 46°44'54" E	35.36

0688203

03306 00347

Filed for Record in:
BRAZOS COUNTY,

On: Jun 14,1999 at 01:39PM

As a
Plats

Document Number: 0688203

Amount 55.00

Receipt Number - 132768
By,
BJ Endler

STATE OF TEXAS COUNTY OF
I hereby certify that this instrument was filed on the date and time stamped hereon by me and was duly recorded in the volume and page of the named records of:
BRAZOS COUNTY,
as stamped hereon by me.

Jun 14,1999

HONORABLE MARY ANN WARD, COUNTY CLERK
BRAZOS COUNTY,

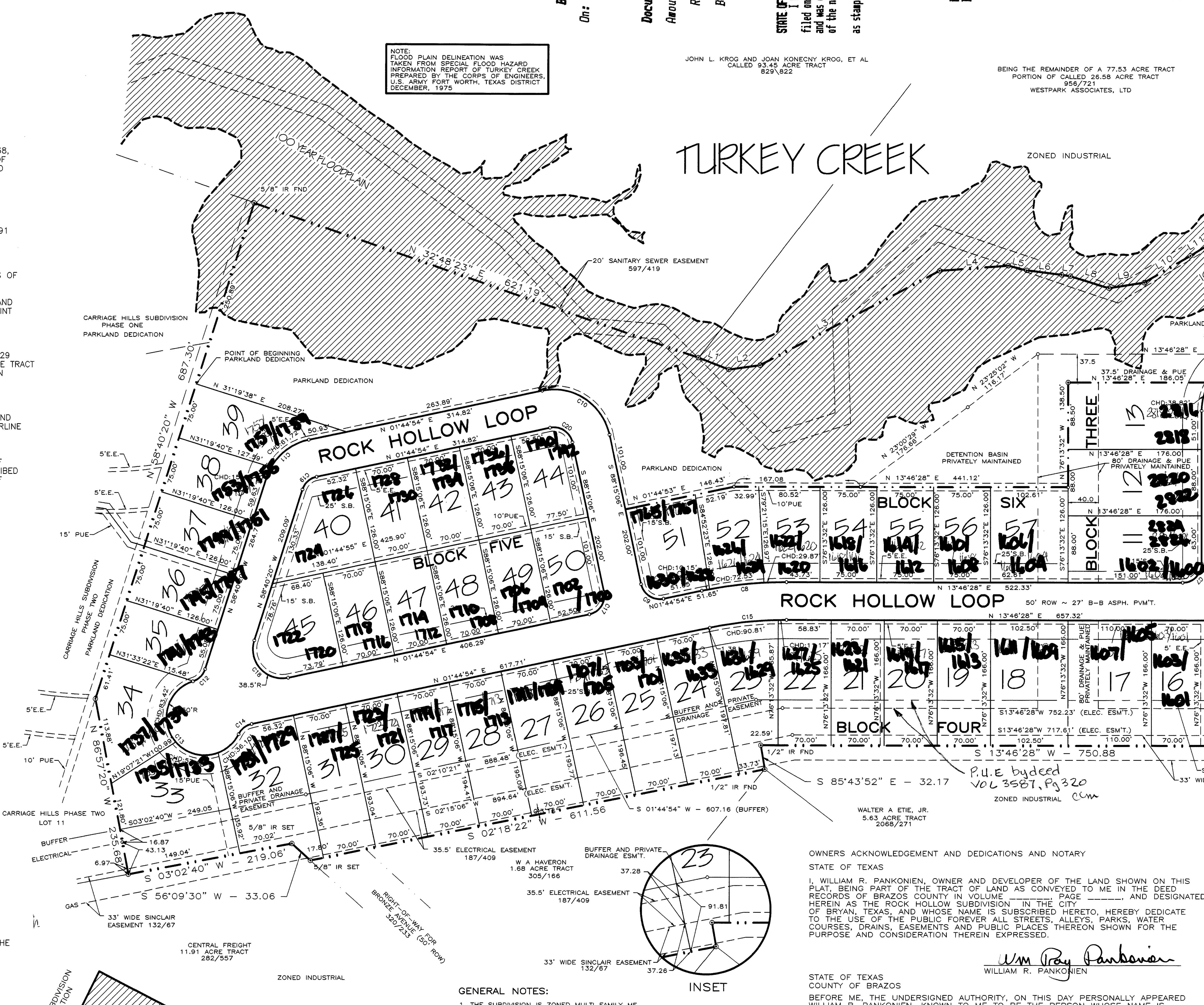

METES AND BOUNDS DESCRIPTION
OF A
27.32 ACRE TRACT
ZENO PHILLIPS LEAGUE, A-45
BRYAN, BRAZOS COUNTY, TEXAS

METES AND BOUNDS DESCRIPTION OF ALL THAT CERTAIN TRACT OR PARCEL OF LAND LYING AND BEING SITUATED IN THE ZENO PHILLIPS LEAGUE, ABSTRACT NO. 45, BRYAN, BRAZOS COUNTY, TEXAS. SAID TRACT BEING A PORTION OF A CALLED 13.097 ACRE TRACT AS DESCRIBED BY A DEED TO WEB/CON, INC. RECORDED IN VOLUME 2968, PAGE 107 OF THE OFFICIAL PUBLIC RECORDS OF BRAZOS COUNTY, TEXAS, AND ALL OF A CALLED 14.558 ACRE TRACT AS DESCRIBED BY A DEED TO WEBCON, INC. RECORDED IN VOLUME 3278, PAGE 150 OF THE OFFICIAL PUBLIC RECORDS OF BRAZOS COUNTY, TEXAS.

SAID TRACT BEING MORE PARTICULARLY DESCRIBED BY METES AND BOUNDS AS FOLLOWS:

COMMENCING AT A 1/2 INCH IRON ROD FOUND ON THE WEST LINE OF A CALLED 11.91 ACRE TRACT AS DESCRIBED BY A DEED TO CENTRAL FREIGHT RECORDED IN VOLUME 282, PAGE 557 OF THE DEED RECORDS OF BRAZOS COUNTY, TEXAS, SAID IRON ROD FOUND MARKING THE SOUTHEAST CORNER OF SAID 13.097 ACRE TRACT AND THE NORTHEAST CORNER OF CARRIAGE HILLS SUBDIVISION, PHASE ONE, ACCORDING TO THE PLAT RECORDED IN VOLUME 2718, PAGE 168A OF THE OFFICIAL PUBLIC RECORDS OF BRAZOS COUNTY, TEXAS;

THENCE: N 58° 40' 20" W ALONG THE COMMON LINE OF SAID 13.097 ACRE TRACT AND CARRIAGE HILLS SUBDIVISION, PHASE ONE, FOR A DISTANCE OF 267.65 FEET TO A POINT ON SAID COMMON LINE MARKING THE POINT OF BEGINNING OF THIS HEREIN DESCRIBED TRACT;

THENCE: N 58° 40' 20" W CONTINUING ALONG THE COMMON LINE OF SAID 13.097 ACRE TRACT AND CARRIAGE HILLS SUBDIVISION, PHASE ONE, FOR A DISTANCE OF 687.29 FEET TO A 5/8 INCH IRON ROD FOUND ON THE EAST LINE OF A CALLED 93.45 ACRE TRACT AS DESCRIBED BY A DEED TO JOHN L. KROG AND JOAN KONECNY KROG RECORDED IN VOLUME 829, PAGE 822 OF THE OFFICIAL RECORDS OF BRAZOS COUNTY, TEXAS (THIS LINE WAS USED FOR BEARING ORIENTATION HONORING THE PLAT CALL BEARING OF CARRIAGE HILLS SUBDIVISION, PHASE ONE, 2718/168A);

THENCE: N 32° 48' 23" E ALONG THE COMMON LINE OF SAID 13.097 ACRE TRACT AND SAID 93.45 ACRE TRACT FOR A DISTANCE OF 621.19 FEET TO A POINT IN THE CENTERLINE OF TURKEY CREEK MARKING THE COMMON CORNER OF SAID 13.097 ACRE TRACT AND SAID 14.558 ACRE TRACT;

THENCE: ALONG THE CENTERLINE OF SAID CREEK, SAME BEING THE COMMON LINE OF SAID 14.558 ACRE TRACT AND A CALLED PORTION OF A 26.58 ACRE TRACT AS DESCRIBED BY A DEED TO WESTPARK ASSOCIATED, LTD, RECORDED IN VOLUME 956, PAGE 721 OF THE OFFICIAL RECORDS OF BRAZOS COUNTY, TEXAS, FOR THE FOLLOWING CALLS:

N 34° 54' 35" E FOR A DISTANCE OF 42.88 FEET TO A POINT;
N 05° 45' 22" E FOR A DISTANCE OF 41.83 FEET TO A POINT;
N 14° 08' 46" W FOR A DISTANCE OF 267.89 FEET TO A POINT;
N 09° 33' 27" E FOR A DISTANCE OF 90.76 FEET TO A POINT;
N 27° 53' 59" E FOR A DISTANCE OF 25.37 FEET TO A POINT;
N 20° 50' 51" E FOR A DISTANCE OF 46.37 FEET TO A POINT;
N 22° 23' 14" E FOR A DISTANCE OF 11.86 FEET TO A POINT;
N 30° 59' 35" E FOR A DISTANCE OF 52.96 FEET TO A POINT;
N 05° 06' 12" E FOR A DISTANCE OF 47.12 FEET TO A POINT;
N 16° 20' 08" W FOR A DISTANCE OF 70.39 FEET TO A POINT;
N 17° 49' 21" W FOR A DISTANCE OF 33.69 FEET TO A POINT;
N 06° 39' 55" W FOR A DISTANCE OF 22.88 FEET TO A POINT;
N 13° 09' 56" W FOR A DISTANCE OF 45.54 FEET TO A POINT;
N 15° 07' 36" W FOR A DISTANCE OF 42.21 FEET TO A POINT;
N 13° 51' 48" W FOR A DISTANCE OF 41.32 FEET TO A POINT;
N 10° 07' 52" E FOR A DISTANCE OF 77.26 FEET TO A POINT;
N 01° 35' 45" W FOR A DISTANCE OF 78.14 FEET TO A POINT;
N 34° 27' 07" E FOR A DISTANCE OF 33.52 FEET TO A POINT;
N 37° 29' 55" E FOR A DISTANCE OF 171.14 FEET TO A POINT ON THE SOUTHWEST RIGHT-OF-WAY LINE OF FARM TO MARKET ROAD NO. 2818 (VARIABLE WIDTH R.O.W.);

THENCE: S 66° 24' 14" E ALONG THE SOUTHWEST LINE OF F.M. 2818 FOR A DISTANCE OF 190.12 FEET TO A 5/8 INCH IRON ROD FOUND MARKING AN ANGLE POINT IN SAID LINE, FOR REFERENCE A CONCRETE RIGHT-OF-WAY MARKER FOUND BEARS: N 41° 38' 39" E FOR A DISTANCE OF 10.27 FEET;

THENCE: S 47° 06' 52" E CONTINUING ALONG THE SOUTHWEST LINE OF F.M. 2818 FOR A DISTANCE OF 257.30 FEET TO A 1/2 INCH IRON ROD FOUND;

THENCE: S 44° 53' 47" E CONTINUING ALONG THE SOUTHWEST LINE OF F.M. 2818 FOR A DISTANCE OF 312.17 FEET TO A 5/8 INCH IRON ROD FOUND MARKING THE NORTH CORNER OF A CALLED 5.63 ACRE TRACT AS DESCRIBED BY A DEED TO WALTER A. ETIE, JR. RECORDED IN VOLUME 2068, PAGE 271 OF THE OFFICIAL PUBLIC RECORDS OF BRAZOS COUNTY, TEXAS, FOR REFERENCE A 1/2 INCH IRON ROD FOUND BEARS: N 13° 46' 28" E FOR A DISTANCE OF 0.51 FEET AND A CONCRETE RIGHT-OF-WAY MARKER FOUND BEARS: S 44° 53' 47" E FOR A DISTANCE OF 516.91 FEET;

THENCE: S 13° 46' 28" W ALONG THE COMMON LINE OF SAID 14.558 ACRE TRACT AND SAID 5.63 ACRE TRACT FOR A DISTANCE OF 750.88 FEET TO A 1/2 INCH IRON ROD FOUND MARKING THE SOUTHEAST CORNER OF SAID 14.558 ACRE TRACT, SAID IRON ROD FOUND BEING ON THE NORTH LINE OF SAID 13.097 ACRE TRACT;

THENCE: S 85° 43' 52" E ALONG THE COMMON LINE OF SAID 13.097 ACRE TRACT AND SAID 5.63 ACRE TRACT FOR A DISTANCE OF 32.17 FEET TO A 1/2 INCH IRON ROD FOUND MARKING THE NORTHEAST CORNER OF SAID 13.097 ACRE TRACT AND THE NORTH CORNER OF A CALLED 1.68 ACRE TRACT AS DESCRIBED BY A DEED TO W. A. HAVERON RECORDED IN VOLUME 305, PAGE 166 OF THE DEED RECORDS OF BRAZOS COUNTY, TEXAS;

THENCE: S 02° 18' 22" W ALONG THE COMMON LINE OF SAID 13.097 ACRE TRACT AND SAID 1.68 ACRE TRACT FOR A DISTANCE OF 611.56 FEET TO A 5/8 INCH IRON ROD SET ON THE SOUTHEAST RIGHT-OF-WAY LINE OF BRONZE AVENUE (50' R.O.W. ACCORDING TO VOLUME 320, PAGE 233 OF THE DEED RECORDS OF BRAZOS COUNTY, TEXAS), SAID IRON ROD SET MARKING AN ANGLE POINT IN THE EAST LINE OF SAID 13.097 ACRE TRACT;

THENCE: S 56° 09' 30" W ALONG THE COMMON LINE OF SAID 11.91 ACRE TRACT AND SAID 13.097 ACRE TRACT FOR A DISTANCE OF 33.06 FEET TO A 5/8 INCH IRON ROD SET MARKING AN ANGLE POINT IN SAID LINE;

THENCE: S 03° 02' 40" W CONTINUING ALONG THE COMMON LINE OF SAID 11.91 ACRE TRACT AND SAID 13.097 ACRE TRACT FOR A DISTANCE OF 219.05 FEET TO A POINT ON SAID LINE, FOR REFERENCE THE AFOREMENTIONED 1/2 INCH IRON ROD FOUND MARKING THE SOUTHEAST CORNER OF SAID 13.097 ACRE TRACT BEARS: S 03° 02' 40" W FOR A DISTANCE OF 126.82 FEET;

THENCE: N 86° 57' 20" W THROUGH SAID 13.097 ACRE TRACT FOR A DISTANCE OF 235.68 FEET TO THE POINT OF BEGINNING CONTAINING 27.32 ACRES OF LAND AS SURVEYED ON THE GROUND SEPTEMBER, 1998.

BRAD KERR
REGISTERED PROFESSIONAL
LAND SURVEYOR No. 4502

on landbase 5/18/2000 wd

ad-Dwg\Webcon\Rock Hollow\Platting\Final\RH-finl.dwg Wed Jun 02 08:09:39 1999 PROPERTY OF HESTER ENGINEERING COMPANY

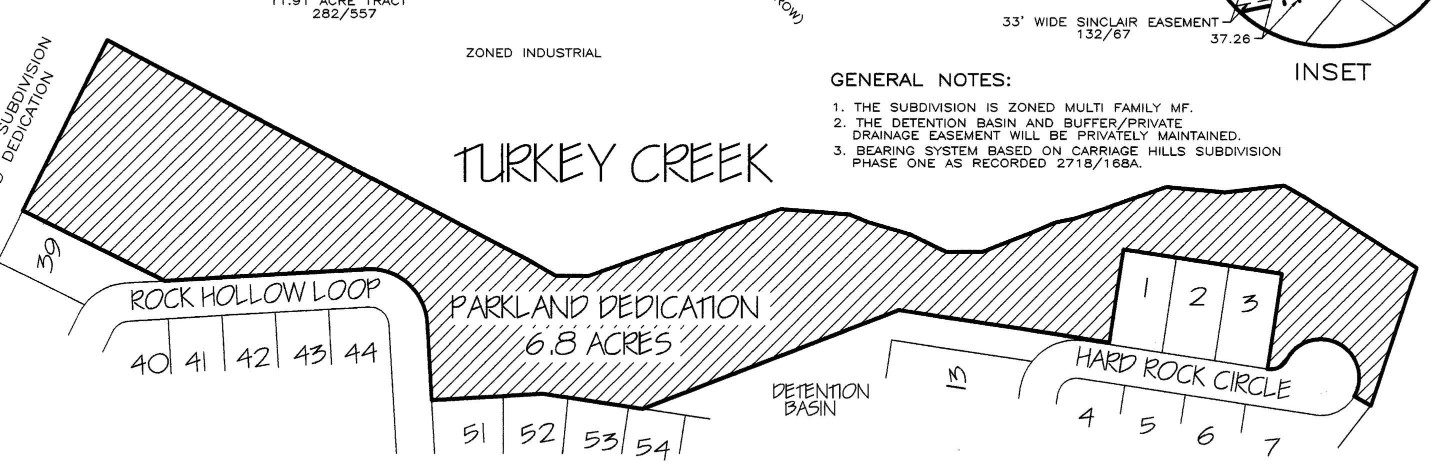

GENERAL NOTES:
1. THE SUBDIVISION IS ZONED MULTI FAMILY MF.
2. THE DETENTION BASIN AND BUFFER/PRIVATE DRAINAGE EASEMENT WILL BE PRIVATELY MAINTAINED.
3. BEARING SYSTEM BASED ON CARRIAGE HILLS SUBDIVISION PHASE ONE AS RECORDED 2718/168A.

CERTIFICATION OF THE SURVEYOR
STATE OF TEXAS
COUNTY OF BRAZOS

I, BRAD KERR, REGISTERED PROFESSIONAL LAND SURVEYOR NO. 4502 IN THE STATE OF TEXAS, HEREBY CERTIFY THAT THIS PLAT IS TRUE AND CORRECT AND WAS PREPARED FROM AN ACTUAL SURVEY OF THE PROPERTY MADE UNDER MY SUPERVISION ON THE GROUND AND THAT THE METES AND BOUNDS DESCRIBING SAID SUBDIVISION WILL DESCRIBE A CLOSED GEOMETRIC FORM.

BRAD KERR, R.P.L.S. NO. 4502

STATE OF TEXAS REGISTERED BRAD KERR 4502 PROFESSIONAL LAND SURVEYOR

OWNERS ACKNOWLEDGEMENT AND DEDICATIONS AND NOTARY
STATE OF TEXAS

I, WILLIAM R. PANKONIEN, OWNER AND DEVELOPER OF THE LAND SHOWN ON THIS PLAT, BEING PART OF THE TRACT OF LAND AS CONVEYED TO ME IN THE DEED RECORDS OF BRAZOS COUNTY IN VOLUME ______, PAGE _____, AND DESIGNATED HEREIN AS THE ROCK HOLLOW SUBDIVISION IN THE CITY OF BRYAN, TEXAS, AND WHOSE NAME IS SUBSCRIBED HERETO, HEREBY DEDICATE TO THE USE OF THE PUBLIC FOREVER ALL STREETS, ALLEYS, PARKS, WATER COURSES, DRAINS, EASEMENTS AND PUBLIC PLACES THEREON SHOWN FOR THE PURPOSE AND CONSIDERATION THEREIN EXPRESSED.

Wm Ray Pankonien
WILLIAM R. PANKONIEN

STATE OF TEXAS
COUNTY OF BRAZOS

BEFORE ME, THE UNDERSIGNED AUTHORITY, ON THIS DAY PERSONALLY APPEARED WILLIAM R. PANKONIEN, KNOWN TO ME TO BE THE PERSON WHOSE NAME IS SUBSCRIBED TO THE FOREGOING INSTRUMENT, AND ACKNOWLEDGED TO ME THAT HE EXECUTED THE SAME FOR THE PURPOSE AND CONSIDERATION THEREIN STATED.

GIVEN UNDER MY HAND AND SEAL OF OFFICE THIS 7th DAY OF June, 1999.

Delores M. Soto
NOTARY PUBLIC IN AND FOR BRAZOS COUNTY, TEXAS

DELORES M. SOTO
Notary Public, State of Texas
My Commission Expires
NOV. 14, 2001

CERTIFICATION BY THE ENGINEER
STATE OF TEXAS
COUNTY OF BRAZOS

I, MICHAEL G. HESTER, REGISTERED PROFESSIONAL ENGINEER NO. 69104 IN THE STATE OF TEXAS, HEREBY CERTIFY THAT PROPER ENGINEERING CONSIDERATION HAS BEEN GIVEN THIS PLAT.

Michael G. Hester P.E.
MICHAEL G. HESTER, P.E.
6.2.99

STATE OF TEXAS MICHAEL G. HESTER 69104 REGISTERED PROFESSIONAL ENGINEER

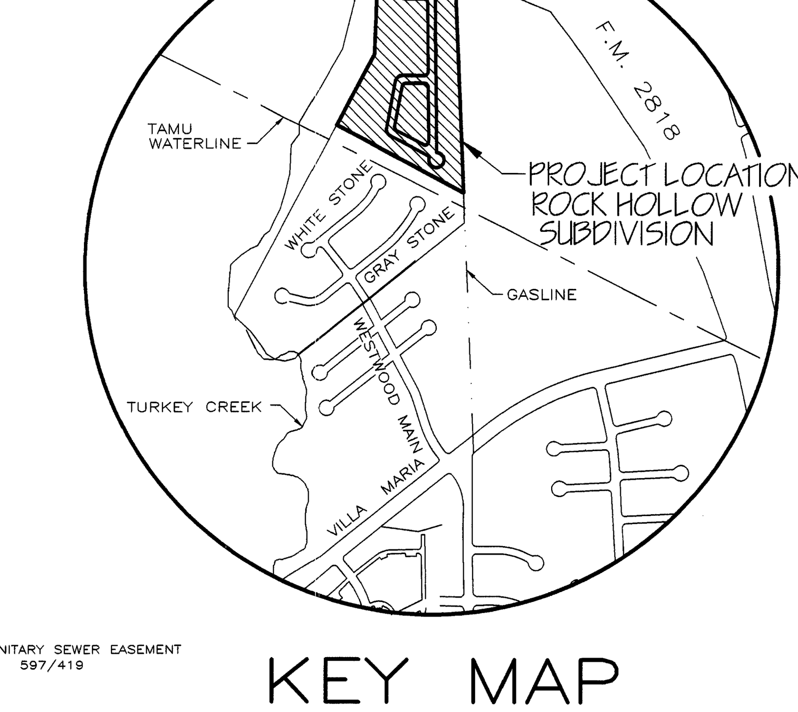

KEY MAP
NTS

APPROVAL OF THE PLANNING COMMISSION

I, THE UNDERSIGNED, CHAIRMAN OF THE CITY PLANNING COMMISSION OF THE CITY OF BRYAN, STATE OF TEXAS, HEREBY CERTIFY THAT THE ATTACHED PLAT WAS DULY FILED FOR APPROVAL WITH THE CITY PLANNING COMMISSION OF THE CITY OF BRYAN ON THE 21st DAY OF April, 1999 AND SAME WAS DULY APPROVED ON THE 3rd DAY OF June, 1999 BY SAID COMMISSION.

Joy Marshall-Caldwell
~~RICHARD PERKINS~~ JOY MARSHALL-CALDWELL
VICE CHAIRMAN, CITY PLANNING COMMISSION, BRYAN, TEXAS

CERTIFICATION OF PLANNING ADMINISTRATOR

I, THE UNDERSIGNED, PLANNING ADMINISTRATOR OF THE CITY OF BRYAN, HEREBY CERTIFY THAT THE PLAT CONFORMS TO THE CITY MASTER PLAN, MAJOR STREET PLAN, LAND USE PLAN, AND THE STANDARDS AND SPECIFICATIONS SET FORTH IN THE ORDINANCE.

JOEY DUNN
PLANNING ADMINISTRATOR, BRYAN, TEXAS

APPROVAL OF THE CITY ENGINEER

I, THE UNDERSIGNED, CITY ENGINEER OF THE CITY OF BRYAN, HEREBY CERTIFY THAT THIS PLAT IS IN COMPLIANCE WITH THE APPROPRIATE CODES AND ORDINANCES OF THE CITY OF BRYAN.

LINDA HUFF, P.E.
CITY ENGINEER, BRYAN, TEXAS

CERTIFICATION BY THE COUNTY CLERK
STATE OF TEXAS
COUNTY OF BRAZOS

I, MARY ANN WARD, COUNTY CLERK IN AND FOR SAID COUNTY, DO HEREBY CERTIFY THAT THIS PLAT TOGETHER WITH ITS CERTIFICATES OF AUTHENTICATION WAS FILED FOR RECORD IN MY OFFICE THE 14 DAY OF June, 1999, IN THE OFFICIAL RECORDS OF BRAZOS COUNTY IN VOLUME 3306, PAGE 347.

Mary Ann Ward by Barbara Jo Deputy Clerk
COUNTY CLERK, BRAZOS COUNTY, TEXAS

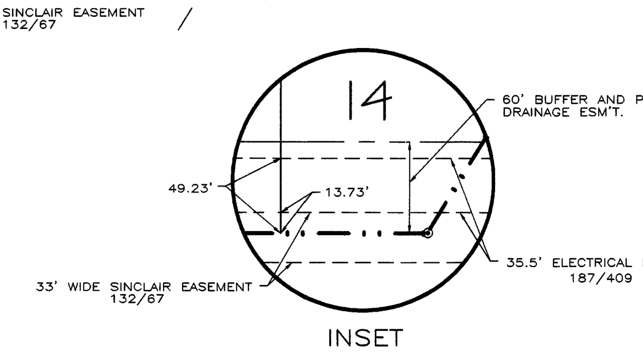

FINAL PLAT
ROCK HOLLOW SUBDIVISION

BLOCK ONE, LOTS 1–3 ~ BLOCK TWO, LOTS 4–10 ~ BLOCK THREE, LOTS 11–13
BLOCK FOUR, LOTS 14–39 ~ BLOCK FIVE, LOTS 40–50 ~ BLOCK SIX, LOTS 51–57

27.32 ACRES
ZENO PHILLIPS LEAGUE, A–45
BRYAN, BRAZOS COUNTY, TEXAS

SCALE: 1"=100'   JUNE 3, 1999

OWNER & DEVELOPER
WEBCON, INC.
1612 FOXFIRE DRIVE
COLLEGE STATION, TX 77845
(409)764–5666

PREPARED BY
HESTER ENGINEERING COMPANY
7607 EASTMARK DRIVE SUITE 253–B
COLLEGE STATION, TX 77840
(409)693–1100